COMPOSITE DECKING

INSTALLATION GUIDE

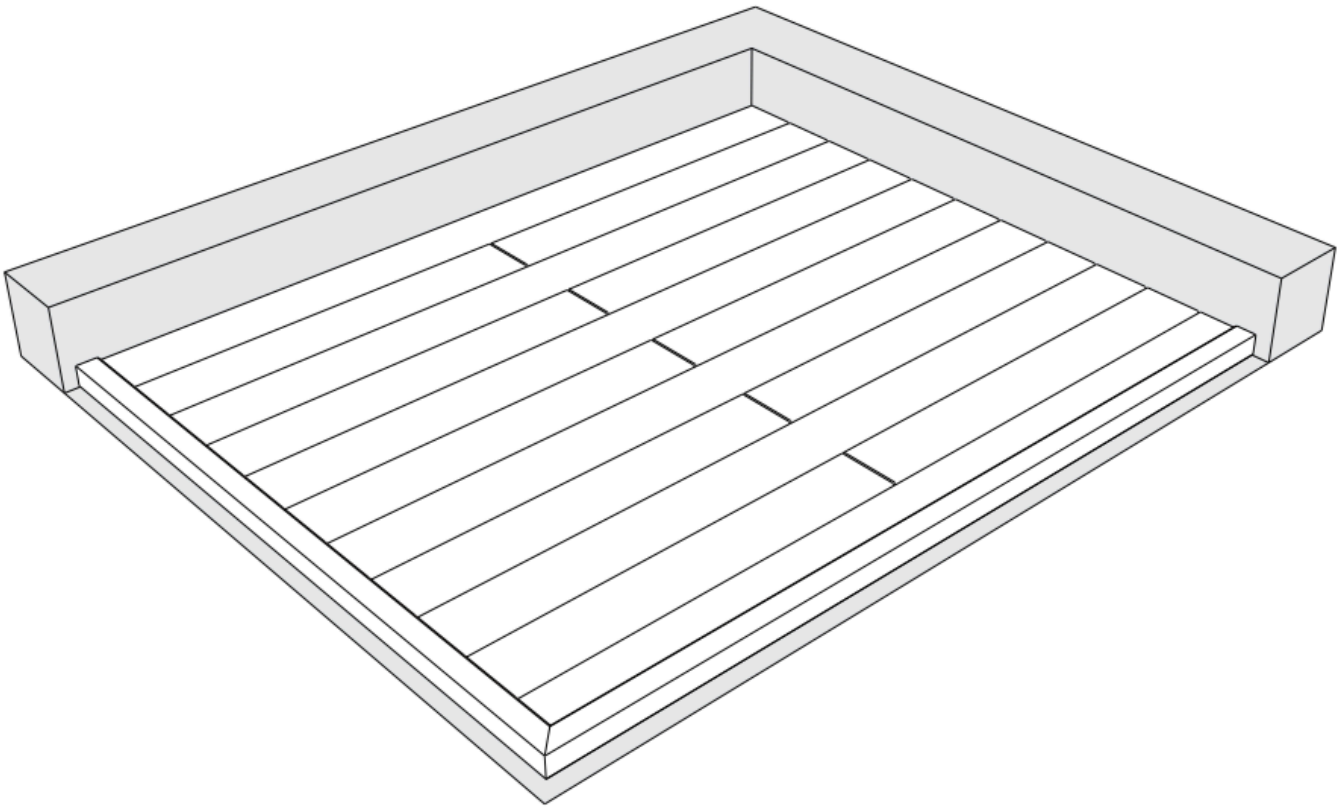

ARENA

COMPOSITE PRODUCTS

Contents

Contents **2**
Important Note **3**
Safety 3
Environment 3
Pre-installation Precautions **4**
1. Ground Preparation 4
2. Selection of Joists and Support Types 4
3. Joist Installation 4
Decking Parts Overview **7**
Recommended Tools 7
Decking Installation **8**
1. Joist Installation 8
2. Starter Clip Installation 8
3. First Board Installation 9
4. Main Board Installation 9
Option A: Install subsequent boards using plastic clips 9
Option B: Install subsequent board using metal clips 10
5. Last Board Installation 10
6. Finishing and Edging 11
Edge Finishing **12**
Stair Installation **13**
Step Framework 13
Important Note 13
Maintenance Guidelines **14**

Important Note

The diagrams and instructions outlined in this guide are for illustrative purposes only and must comply with all local building regulations. The consumer assumes all risks and responsibilities associated with the construction and use of this product.

To ensure valid warranty coverage, please read this guide carefully prior to commencement. The following sections provide professional guidance on material handling, recommended equipment, and key technical considerations essential for the successful installation of Arena Composite Decking products. All decking boards are intended for outdoor pedestrian applications only and must not be used for structural load bearing purposes.

Store boards flat on-site for a minimum of 48 hours to acclimatize before installation.
Avoid impact during unloading and handling, carry boards on edge for stability and store them on a flat, level surface.

Length tolerance of boards: ±0.1% mm. Some boards may require trimming before installation. Standard woodworking tools are compatible with Arena composite Decking; however, for optimal results, use carbide-tipped blades to ensure the cleanest cuts. When operating a circular saw, a 40–50 tooth blade is recommended. For all screw applications, pre-drill to allow for proper countersinking.

For specific tool safety and operation, always refer to the original manufacturer 's user manual.

Safety

Please take safety precautions before installing the decking, check that the equipment is working properly and is free of malfunctions, and wear protective safety equipment such as gloves, goggles, and impact resistant shoes.

Environment

Proper installation requires a clean, smooth, flat and sturdy surface/sub frame.

Pre-installation Precautions

1. Ground Preparation

The ground must be flat, stable, and well-drained to prevent water accumulation under the decking. The structural design must not obstruct rainwater drainage or free air circulation.

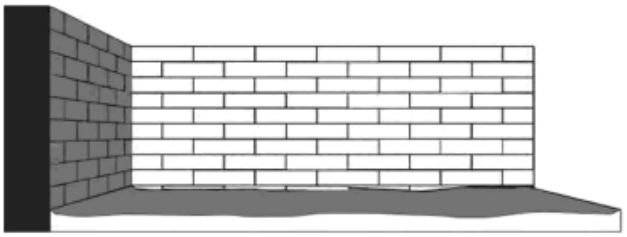

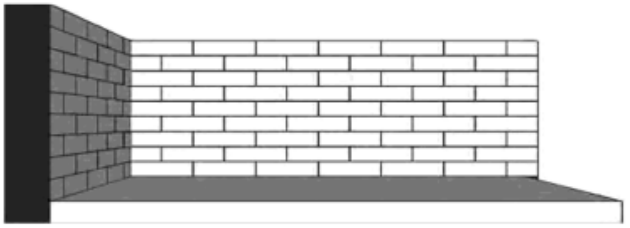

- Installation on Hard Base Surfaces (Concrete, Stone Slabs, Ceramic Tiles, etc.)
  The base surface must maintain a drainage slope of at least 1%-2% to ensure smooth rainwater runoff.
- Installation on Porous / Loose Ground (Soil, Gravel, etc.)
  After the ground is compacted, a geotextile with a weight of at least 100 g/m^2 must be laid to prevent weed growth.

2. Selection of Joists and Support Types

The outer profile thickness of the joist must be greater than 25mm, and the width must be no less than 40 mm to ensure good ventilation and ease of end-joining. Recommended joists include:

- Hard Base Surfaces
  Preservative-treated pine joists, aluminium alloy joists, wood-plastic composite joists, and metal joists.
- Soft Ground
  Preservative-treated pine joists, aluminium alloy joists, and galvanized metal joists.

3. Joist Installation

Joists must be installed perpendicular to the boards. For residential use, install at the recommended spacing of 300–350mm centres (see Figure A), while for commercial or public areas, the spacing should be 250 mm. If the boards are installed diagonally, the joist spacing must be reduced by 50-100 mm (see Figure B).

Timber joists must never come into direct contact with the ground and must be installed on packers/shims with a minimum thickness of 5 mm. Obstruction of the airflow channels beneath the boards is strictly prohibited to prevent condensation. Insufficient ventilation will invalidate the warranty. Before laying the joists, ensure the surface is level and has a pre-set drainage slope of

1%–2%. The layout of joists must account for the drainage direction or incorporate drainage gaps beneath the joists to ensure efficient water runoff.

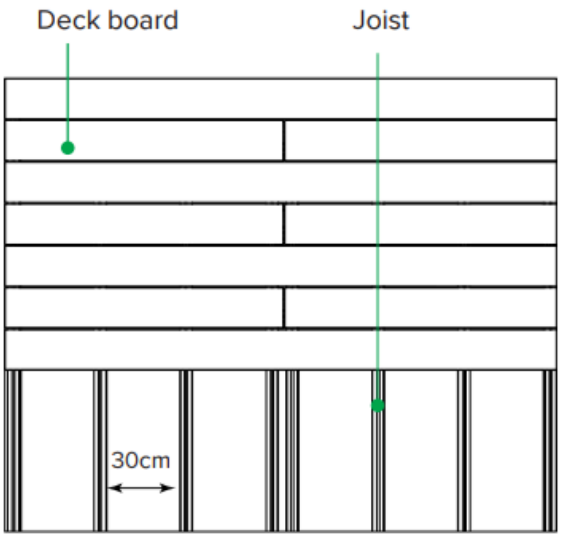

Figure A

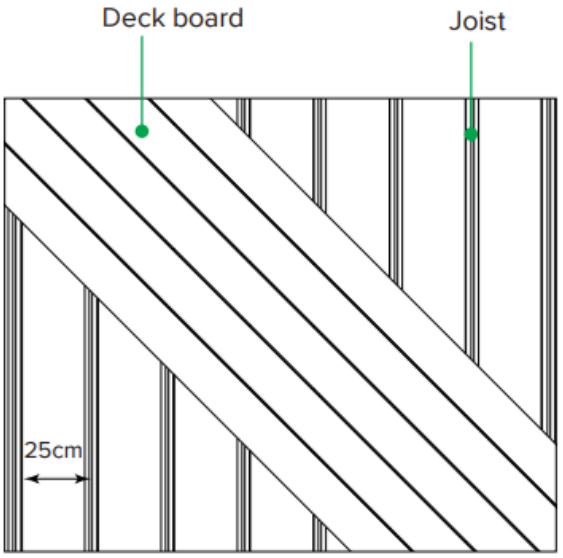

Figure B

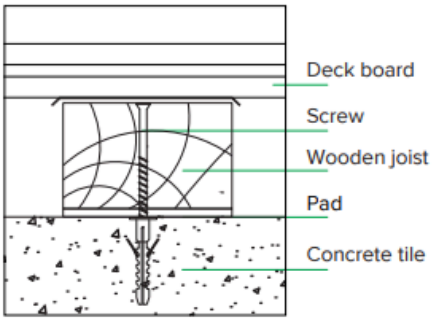

Installation of Wooden Joist

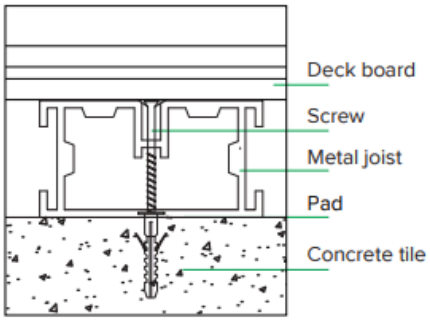

Installation of Metal Joist

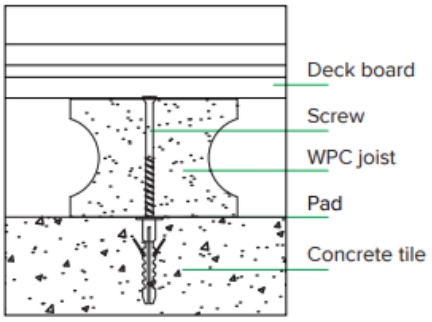

Installation of WPC Joist

4. Expansion and Contraction Gaps

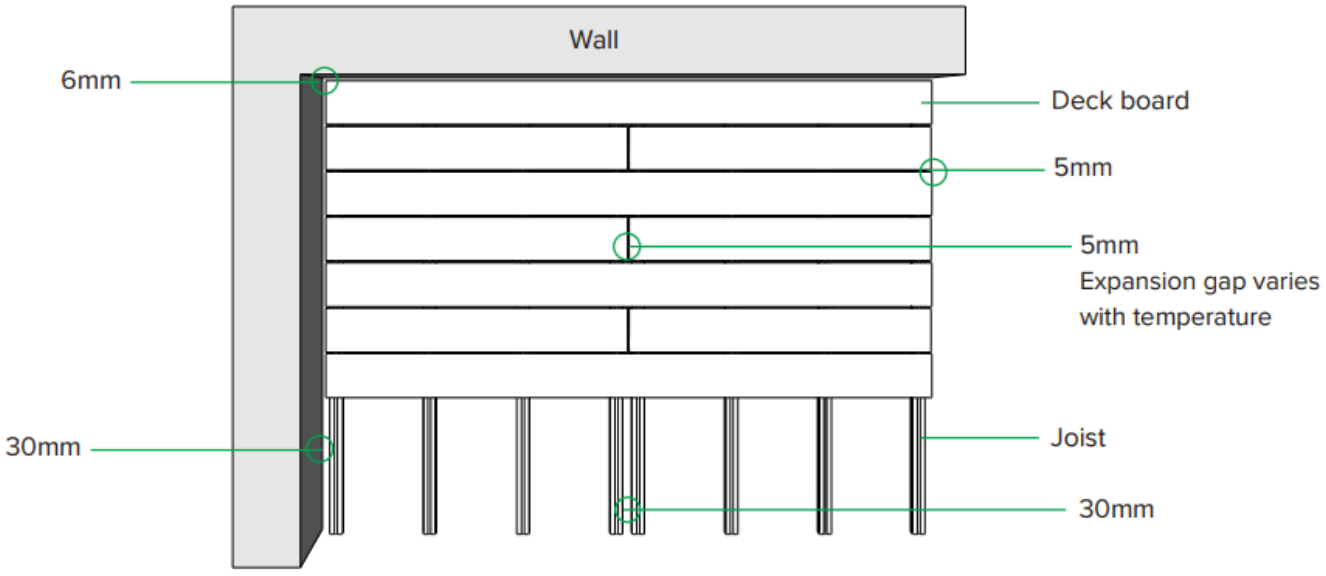

- The decking installation direction should be perpendicular to the walking direction.
- The minimum required lateral gap between boards is 5mm. For pier or port areas, increase this spacing appropriately.
- When the decking is adjacent to a wall, adjust the gap to 6mm based on the installation temperature. The minimum required gap between the butt ends of boards is 3-5mm.
- During installation, expansion joints must be reserved at both ends and between boards. These gaps facilitate drainage and accommodate minor thermal expansion/contraction.
- Arena decking should be installed with a minimum clearance of 25mm to allow air circulation and keep it dry.

Temperature Difference And Expansion Gap Guidance Table

ΔT / Length	10℃	20℃	30℃	40℃	50℃	60℃	70℃	80℃
1.0 M	0.5 mm	1.0 mm	1.5 mm	2.0 mm	2.5 mm	3.0 mm	3.5 mm	4.0 mm
2.0 M	1.0 mm	2.0 mm	3.0 mm	4.0 mm	5.0 mm	6.0 mm	7.0 mm	8.0 mm
2.2 M	1.1 mm	2.2 mm	3.3 mm	4.4 mm	5.5 mm	6.6 mm	7.7 mm	8.8 mm
2.9 M	1.5 mm	2.9 mm	4.4 mm	5.8 mm	7.3 mm	8.7 mm	10.2 mm	11.6 mm
4.0 M	2.0 mm	4.0 mm	6.0 mm	8.0 mm	10.0 mm	12.0 mm	14.0 mm	16.0 mm

This table illustrates how temperature fluctuations affect the length of WPC decking. Please note that the first row represents the temperature differential (ΔT) rather than the absolute temperature.

This is the difference between the maximum annual temperature and the temperature at the time of installation. For example, if the maximum annual temperature for the area is 30°C and the temperature at the time of installation is 10°C then ΔT = 20°. If the length of the board is 3600mm then the gap at the ends of the boards should be 4mm.

We recommend that the ΔT in the installation area remains within a range where the floor expansion does not exceed 10 mm.

ΔT = Max. Annual Temp - Installation Temp

- For a temperature differential within 40°C, the recommended max mum board length is 2.9m, with a reserved expansion gap of 5.8mm between joints.
- Based on the principles of thermal expansion and contraction, the maximum expansion gap should be reserved if installation occurs during winter or at the lowest seasonal temperature.

Decking Parts Overview

Product	Description
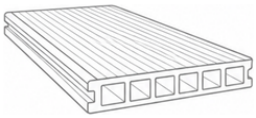	Decking Board
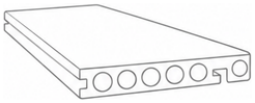	Edge Board
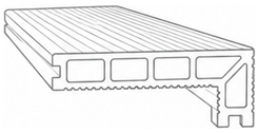	Step Board
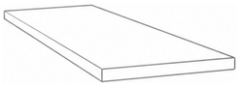	Fascia Board
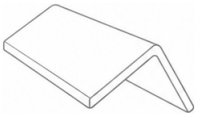	Edge/Cover Trim
	Plastic T-Fixing Clip
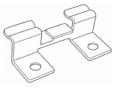	Metal Centre Fixing Clip
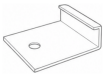	Starter Clip
	Uni- Move
	Stainless Steel Screw

Recommended Tools

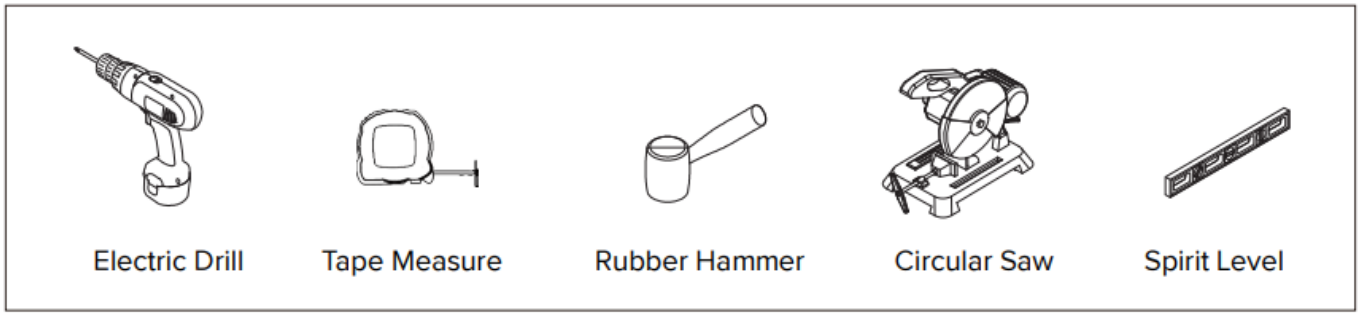

Decking Installation

1. Joist Installation

Measure the overall distance. Lay the joist 30mm from the wall and keep a 300mm spacing between two joists widthways. If the decking board isn't long enough and requires butting up to another board, use two joists at the juncture with a spacing between the two joists of 30mm. To allow for thermal expansion a gap of around 5mm should be left between decking boards laid end-to-end.

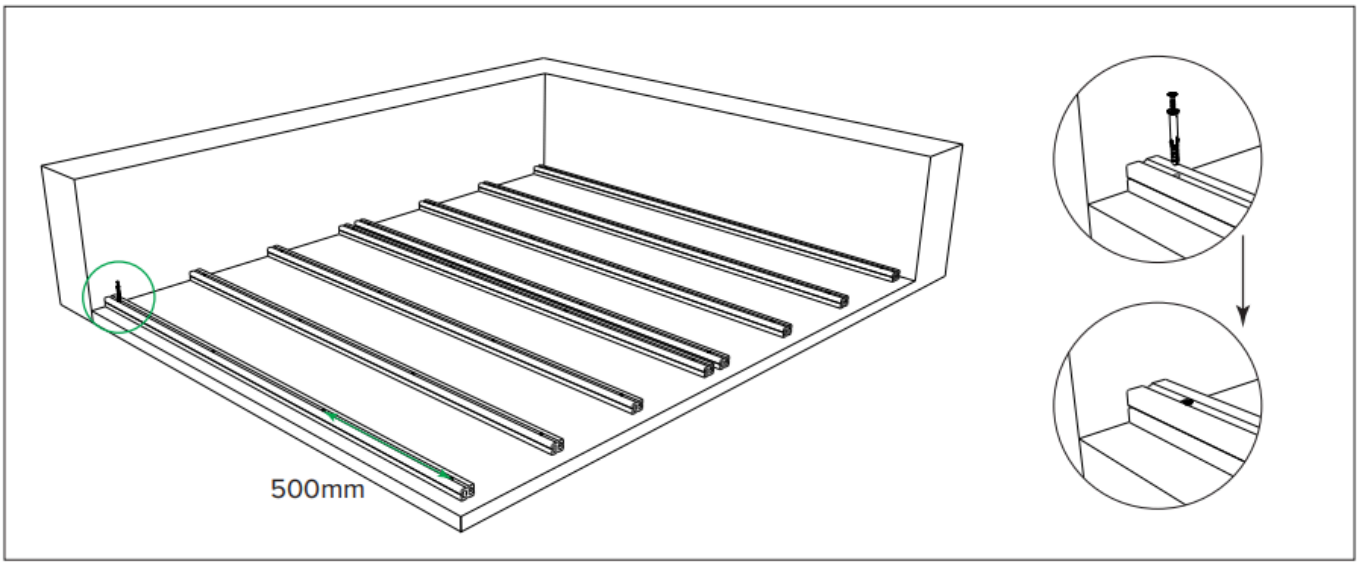

2. Starter Clip Installation

Place the starter clips at the centre of the end of the joist. Drill holes with a drill and then secure the clips to the joist using screws.

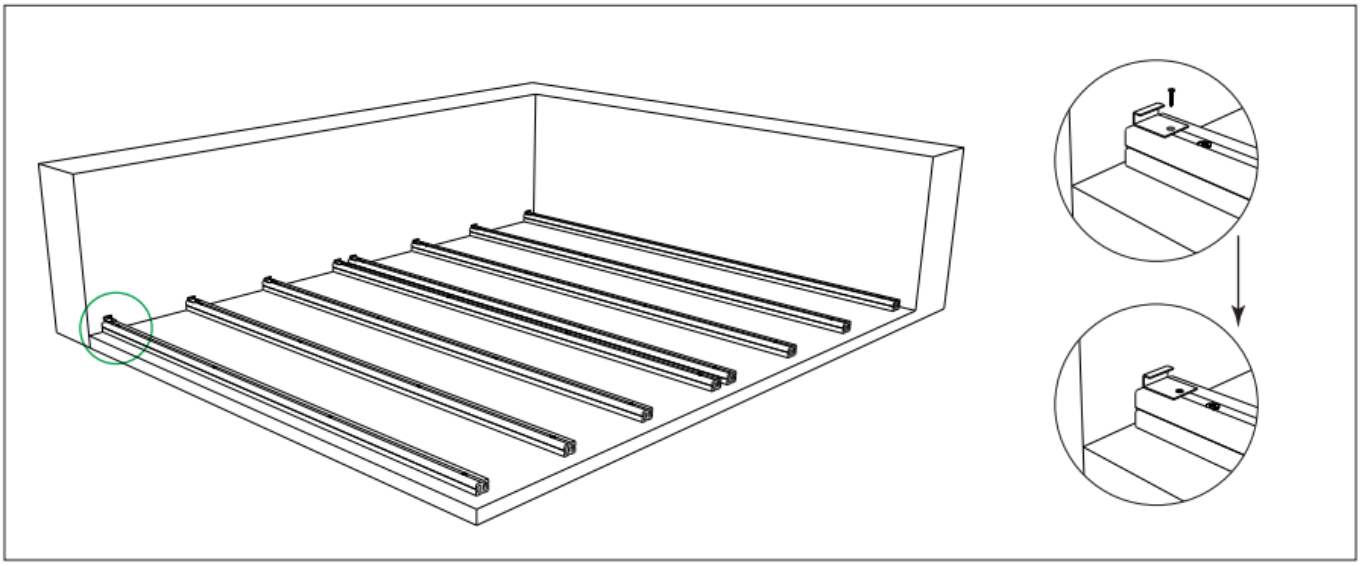

3. First Board Installation

Push the first piece of decking board firmly into the starter clips, as shown on the right.

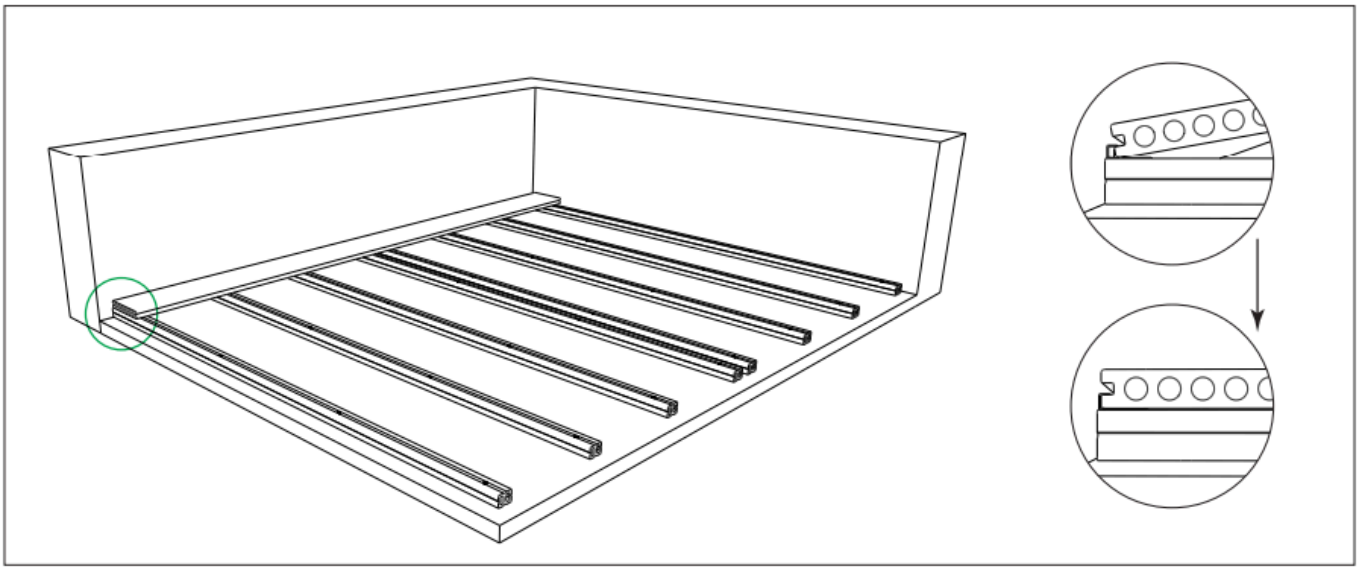

4. Main Board Installation

A uni-move clip is used at one end of a decking board. Slide the uni-move clip into the board grooves between two side by side boards and centre it on the joist, pre-drill a pilot hole and loosely secure them with screws.

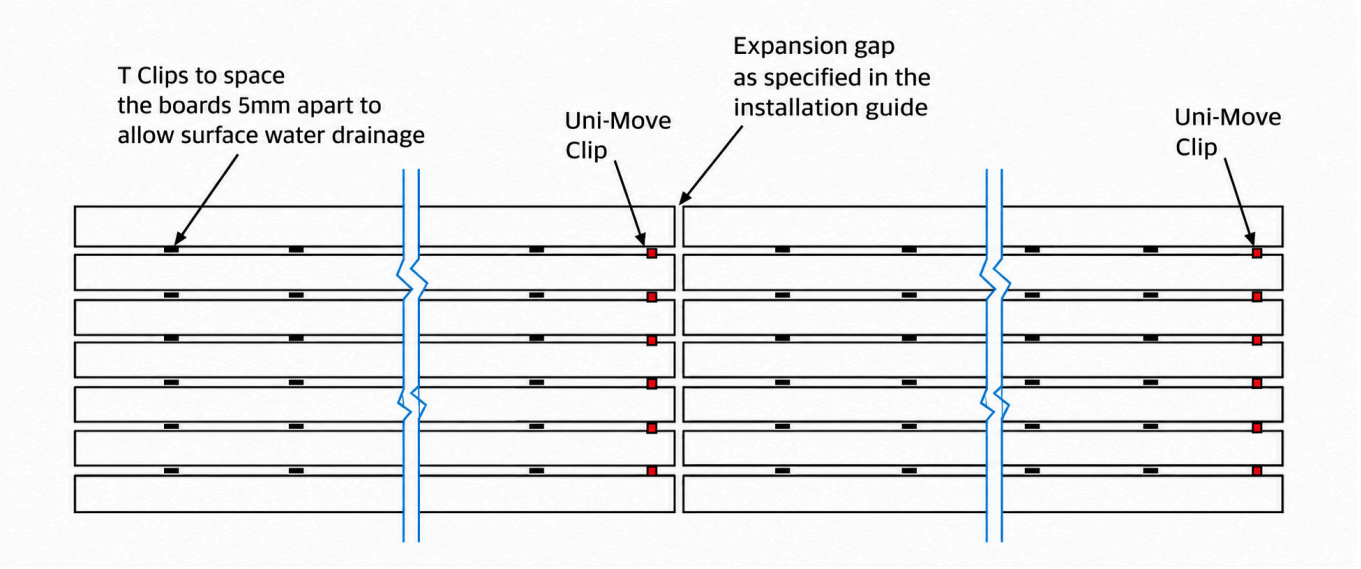

You may use either Plastic Clips or Metal Clips to install the main board.

Option A: Install subsequent boards using plastic clips

a. With the Uni move clip positioned on the joist at one end of a board, position the plastic T-clips into the decking board groove, aligning them with the centre of each subsequent joist. Pre-drill pilot holes and loosely secure them with screws.

b. Slide the next board's groove into the Uni move clip and the T clips, push tight, and then fully tighten the screws. Repeat the above steps to install the other boards until the last on

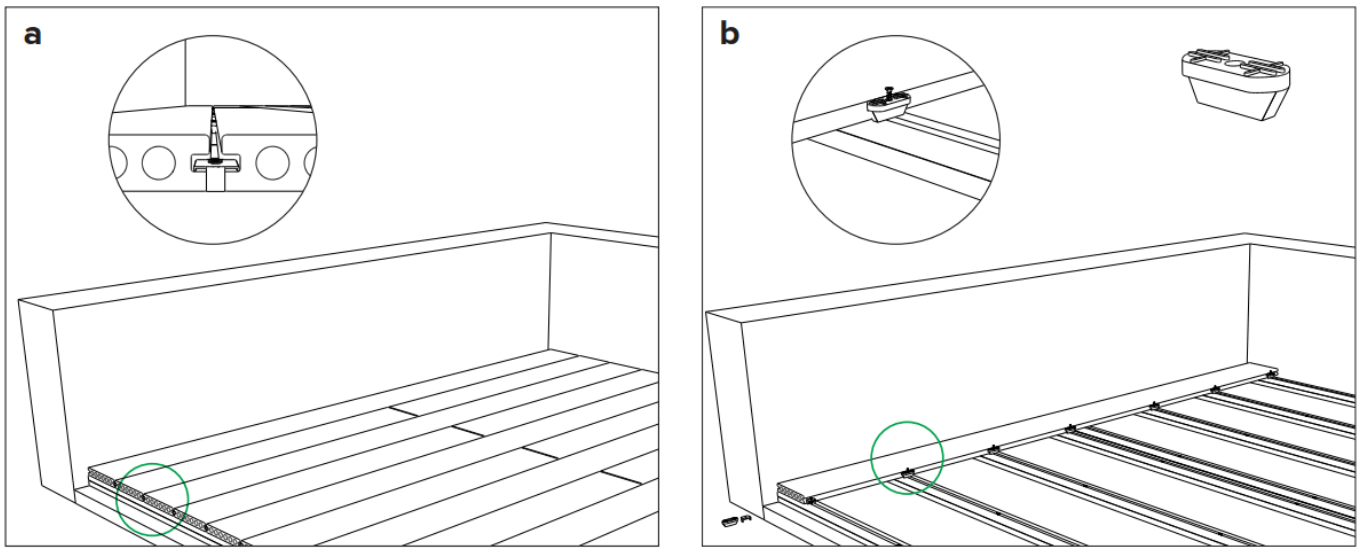

Option B: Install subsequent board using metal clips

a. With the Uni move clip positioned on the joist at one end of a board, position the connecting metal clips into the remaining board grooves, aligning them with the centre of each subsequent joist. Pre-drill the pilot holes and secure them with screws.
b. Slide the next board's groove into the Uni move clip and tongue of each of the connecting metal clips, then tighten the Uni move screw. Repeat the above steps to install the other boards until the last one.

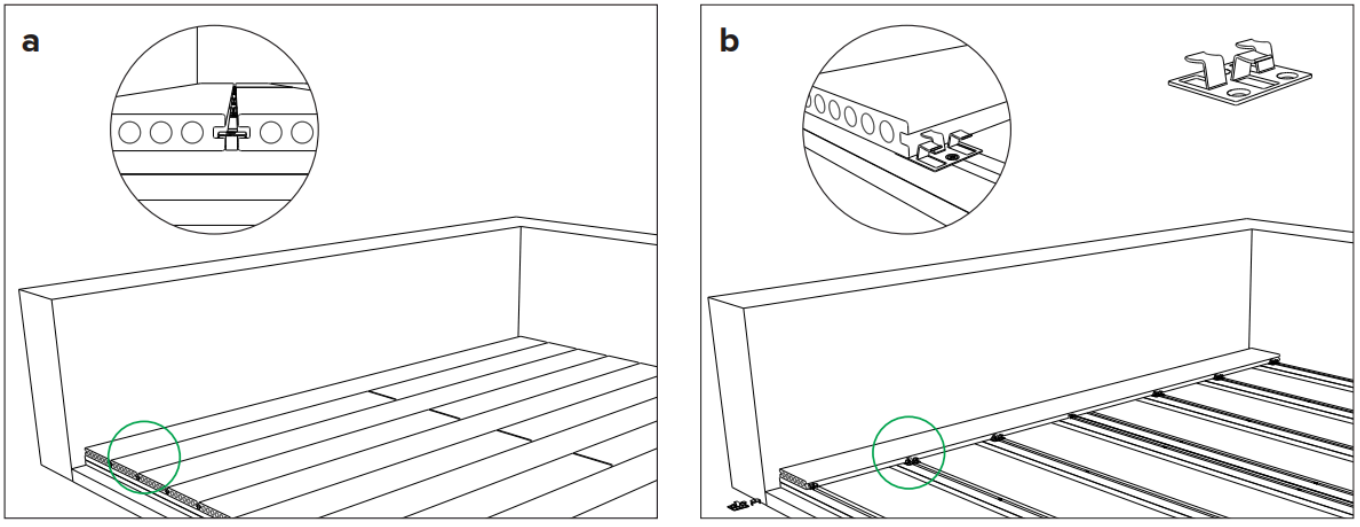

5. Last Board Installation

Cut the final board to the actual installation dimensions. Pre-drill pilot holes on the board surface at the corresponding joist positions, then secure with screws

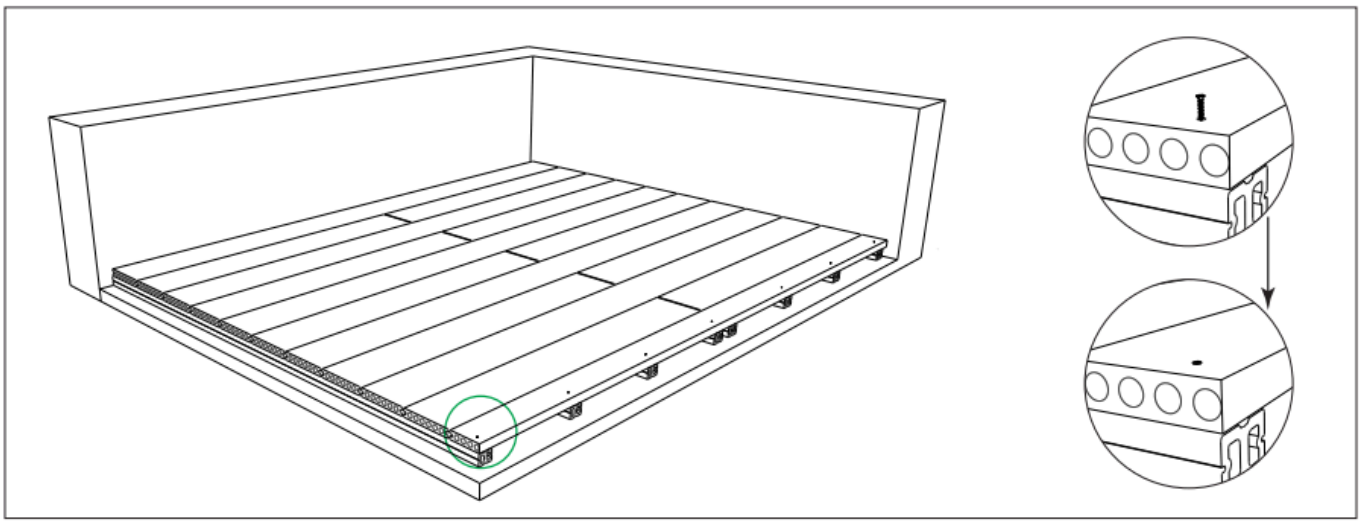

6. Finishing and Edging

Cut end covers to length with 45° mitred ends for a flush fit. Leave a 1-2mm gap at the mitre joint for thermal expansion.Pre-drill and fasten to the decking board, maintaining a maximum screw spacing of 500 mm.

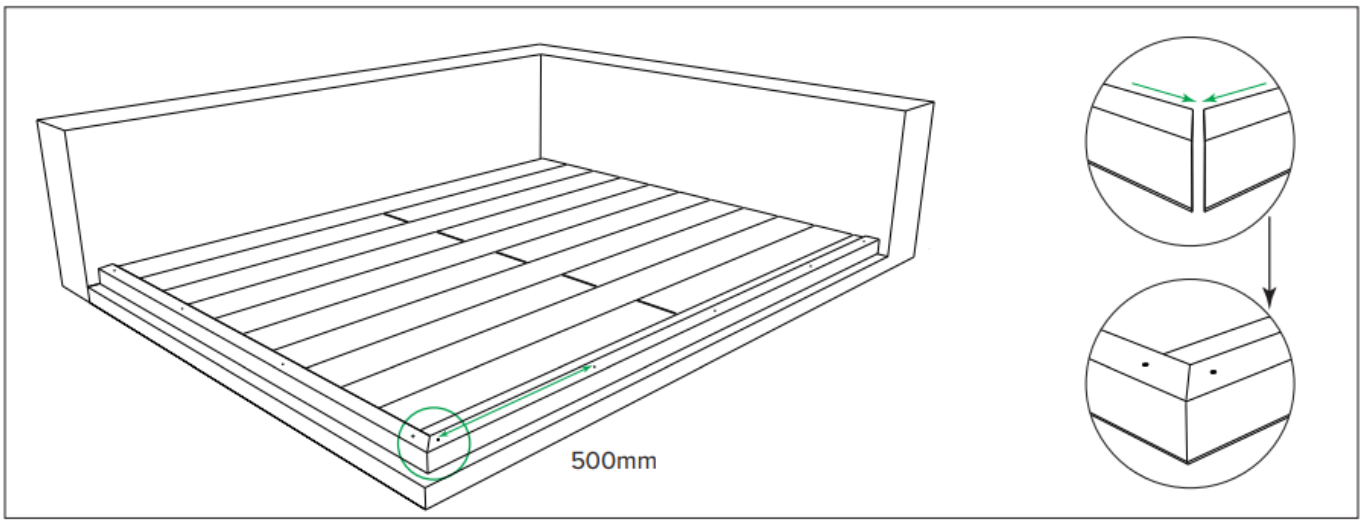

Edge Finishing

There are several options to finish at the edge of decking and for covering step risers and treads. There is no 'one-size-fits-all' solution; the choice often depends on personal preference. The following guide provides installation recommendations for various fixing methods—all designed to deliver a seamless, concealed finish for your decking.

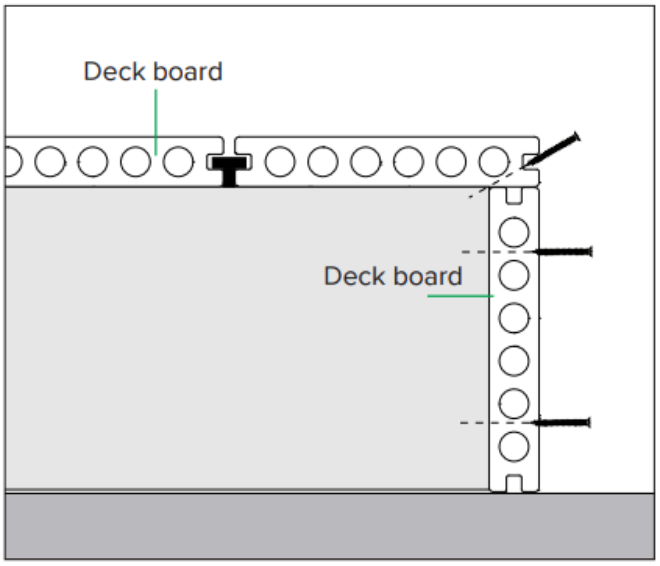

Using a decking board

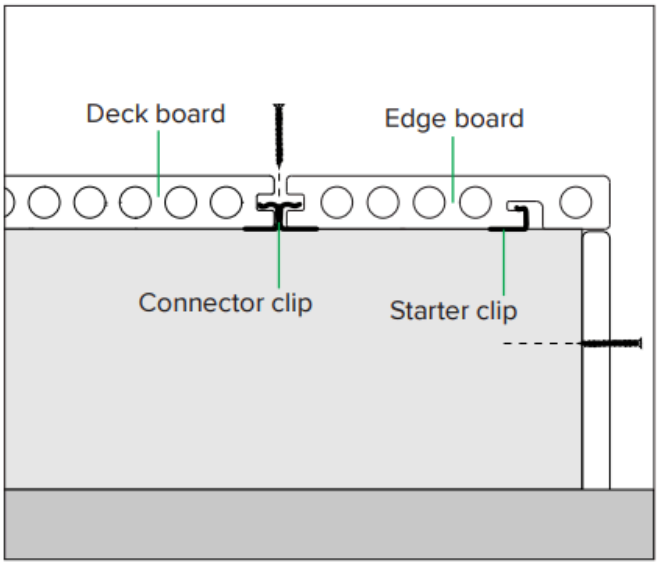

Using an Edge Board

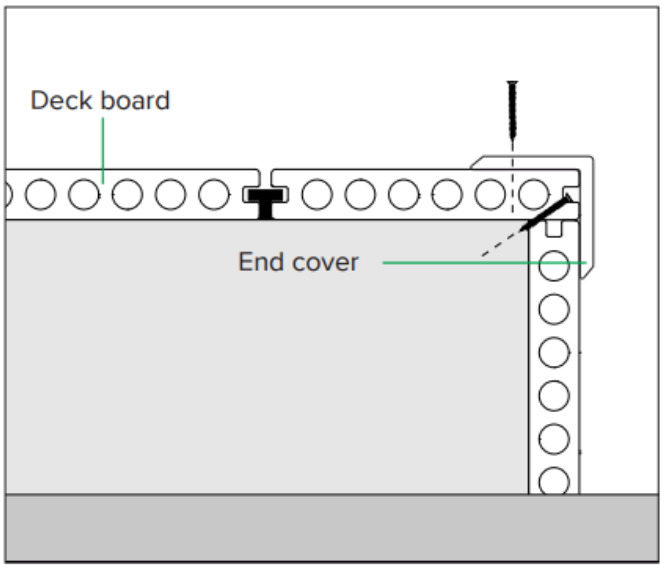

Using a end trim

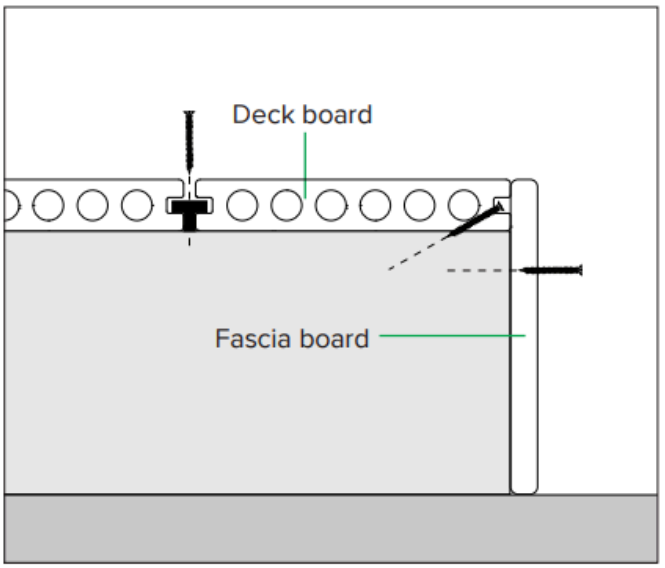

Using a fascia board

Stair Installation

To ensure structural integrity and safety, decking steps must be meticulously planned with a consistent rise and run; specifically, the riser height should be between 150mm and 190mm, while the tread depth must be maintained between 280mm and 450mm. It is highly recommended to install a level, solid landing pad (such as concrete or compacted gravel to provide a stable foundation and necessary structural support for the entire stair assembly.

Step Framework

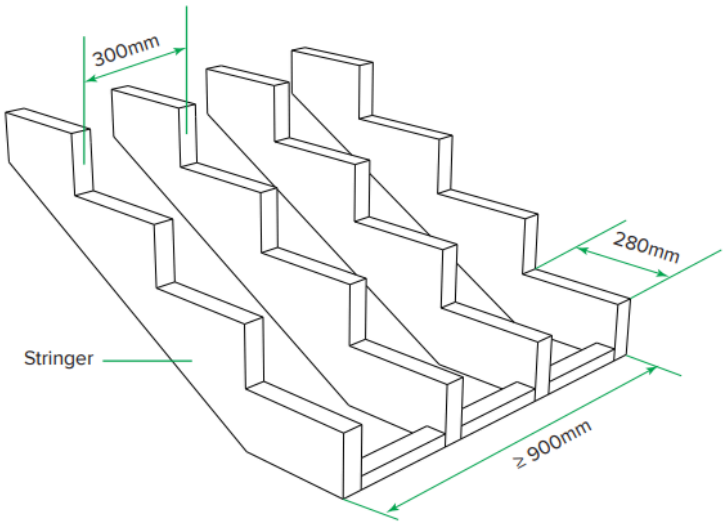

Important Note

Step/stair installation must strictly adhere to local building regulations and be manufactured to suit the specific dimensions of the decking boards.

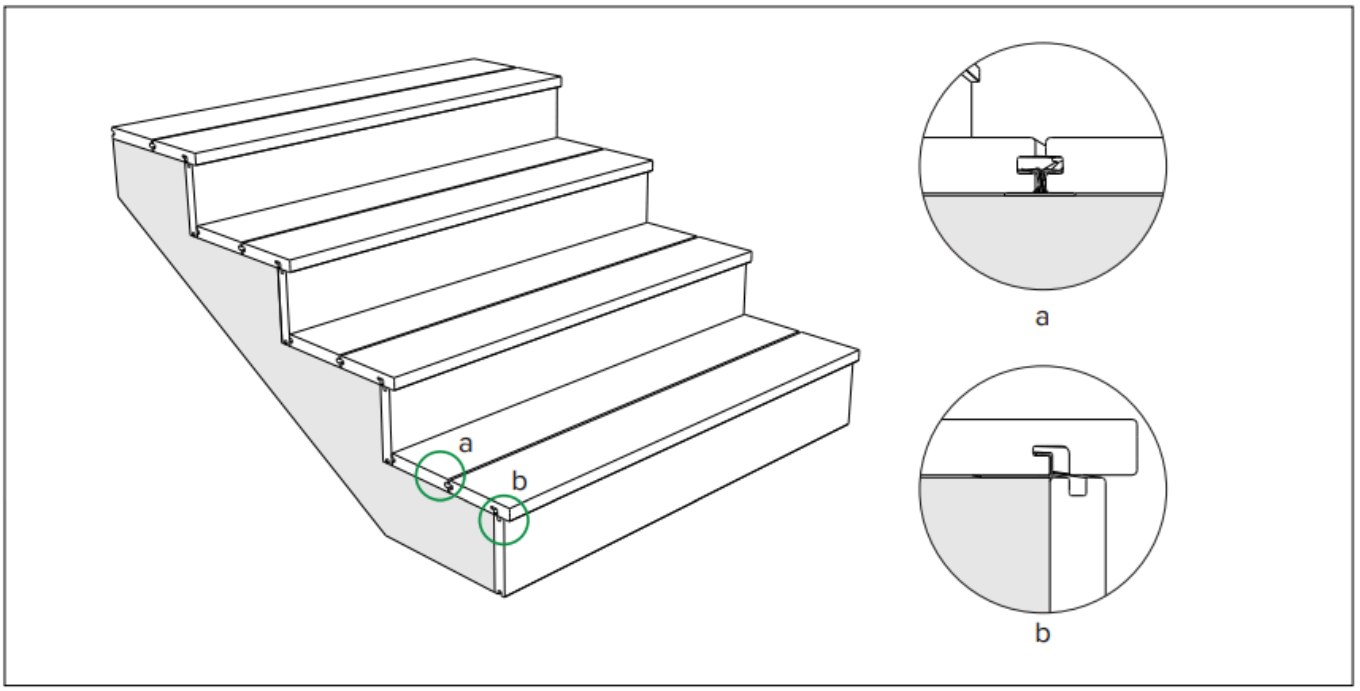

Maintenance Guidelines

To ensure the structural integrity of the decking, boards must not be utilised as primary load bearing supports for pool covers, lighting fixtures, or fencing posts. For recessed lighting, specific expansion gaps are mandatory.

Furthermore, all pool fencing and railing systems must be anchored to structural framing rather than the decking boards themselves. It is recommended to use stone coping rather than fascia boards around pool plumbing, and gate wheels should operate exclusively on dedicated tracks to–prevent surface contact.

Problem	Solution
General Debris & Mold	Accumulations of dirt or Mold should be treated with warm soapy water and a soft, non-metallic brush. For deep cleaning, a pressure washer may be used, provided the pressure remains below 1750 PSI (120 bar) and the nozzle is kept at least 30cm from the surface.
Oil /Grease /Food	All oil/grease/food spills must be removed promptly. Use warm soapy water and a soft non-metal scrub brush to clean. Grease and oil stains may require an all-purpose cleaner if the initial warm soapy water does not work.
Efflorescence & Water Spots	To remove mineral deposits or salt-water spots (white films), apply a 1:1 mixture of white vinegar and water. Allow the solution to sit for 10 minutes before scrubbing and rinsing.
Ice and snow	Avoid using metal objects to clear snow or ice off your decking. We recommend using a salt-free, non-corrosive ice melt designed not to leave any residue on the surface of the decking, as these are generally more effective than salt-based alternatives.
Irregular Heat Sources	Composite products have the tendency to retain heat. Proper precautions should be taken to avoid your decking being exposed to any fires or irregular heat sources to ensure no damage occurs.